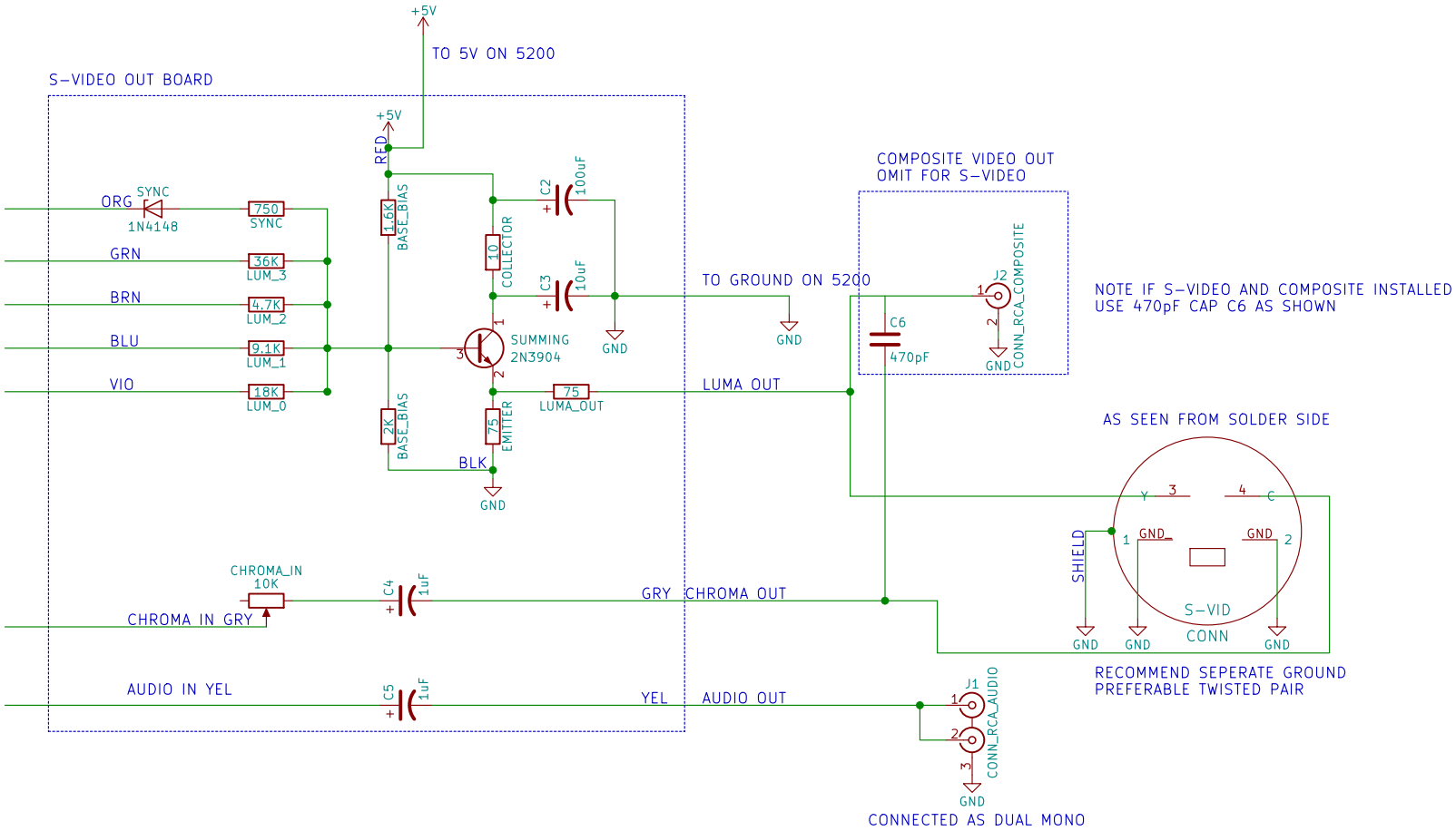

THANK YOU TO ATARI AGE AND GAMESX.COM
WIRE COLORS MATCH PHOTO
RETROGAME.CYBERPHREAK.COM

Sheet: /
File: 5200_s_video_out.sch

Title: S-VIDEO OUTPUT ATARI 5200

Size: USLetter	Date: 2018-09-21	**Rev: B**
KiCad E.D.A. kicad 4.0.6		Id: 1/1